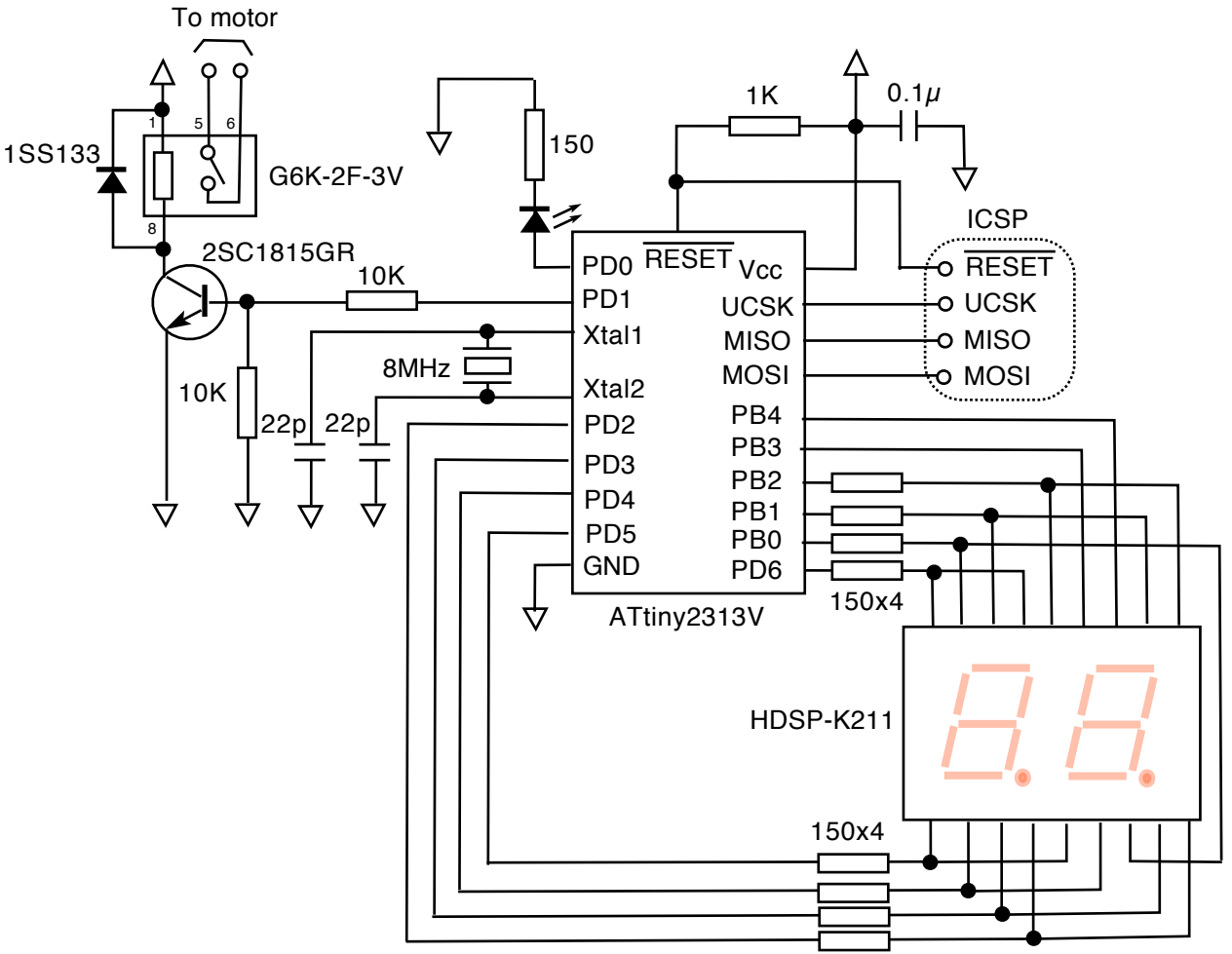
To motor
1SS133
1
5
6
8
G6K-2F-3V
2SC1815GR
10K
10K
22p
22p
8MHz
150
1K
0.1μ
ICSP
RESET
UCSK
MISO
MOSI
PD0
PD1
Xtal1
Xtal2
PD2
PD3
PD4
PD5
GND
RESET
Vcc
UCSK
MISO
MOSI
PB4
PB3
PB2
PB1
PB0
PD6
ATtiny2313V
150x4
HDSP-K211
150x4